マヤコ | Mayako
unofficial MX8E v0.3

SETUP SHEET
v. 1.2 - UPPER LINKS

DRIVER Bas Ruijter
TRACK MACH-One Helmond
RACE Winter is Coming **DATE** 29-10
TEMP 12-15 **BEST LAP** 39.993 **BEST RESULT** 1st **QUALIFYING POS.** 3th **FINAL POS.** 1st

TRACK SIZE ☐ TIGHT ■ MEDIUM ■ OPEN
SURFACE ☐ DUSTY ☐ BLUE GROOVE ■ LOW GRIP ■ MEDIUM GRIP ☐ HIGH GRIP
CONDITION ■ SMOOTH ■ BUMPY ☐ 50/50 ☐ CLAY ☐ GROOVE WITH DUST ☐ EDGY

ESC	Xerun XR8 Pro	BATT MAH	7500	FRONT DIFF OIL	30k	OIL QUANTITY(gr)	49.7	DIFF GEAR	45
MOTOR	HobbyWing	BATT TYPE	☑ 4S ☐ 2X2S	CENTER DIFF OIL	15k	OIL QUANTITY(gr)	59.5	DIFF PINION	14
MOTOR KV	1900	BATT SIZE	☑ STICK ☐ SHORTY	REAR DIFF OIL	7k	OIL QUANTITY(gr)	49.7	SPUR GEAR	48
BATTERY	Ultimate	BATT VOLTAGE	☐ 14.8v ☑ 15.2v LIHV	RUNTIME	N/A			MOTOR PINION	15 Arrowm

SHOCKS

	FRONT	REAR
OIL	550	450
PISTON	5x1.5	5x1.5
SPRING	Black	Brown
LENGTH		
VISIBLE SHAFT LENGTH		
REBOUND	0	0

FRONT SHOCK END ☑ LONG ☐ SHORT
SHOCKS TYPE ☑ EMULSION ☐ BLADDER

NOTES: Stock 20c oils: 5x1.5/5x1.5 - 600/500

CHASSIS

	FRONT	REAR
CAMBER	-1	-2
RIDE HEIGHT	22	23
DOWNTRAVEL (WITH TYRES)		
DOWNTRAVEL (on 36mm blocks)	+2 (32)	+1 (31)
ANTI ROLL BARS	2.3	2.4

CENTRE DIFF MOUNT TOP ☑ CARBON (KIT) ☐ ALU (OPT)

BATT POSITION FWD/AFT

WEIGHT

TYRES

	FRONT	REAR
BRAND	Schumacher	Schumacher
TREAD	Minipin	Minipin
COMPOUND		
WHEELS	ProCircuit	ProCircuit
INSERTS	Black	Black
GLUED TO WHEEL	☐ YES ☐ NO	☐ YES ☐ NO

FRONT END

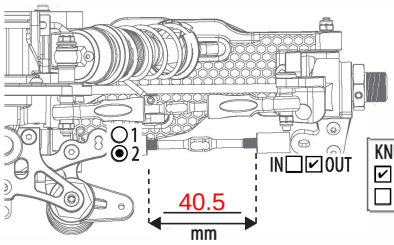

HEX WIDTH: ☐ 4 mm ☑ 5 mm ☐ 6 mm

KNUCKLE PLATE: ☑ 1 LONG ☐ 2 SHORT

SHOCK TOWER ☑ ALUMINIUM ☐ CARBON

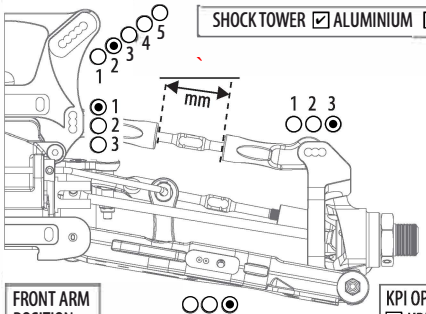

KNUCKLE POSITION: ☐ UP ☐ MIDDLE ☑ DOWN

SERVO SAVER: ☐ YES ☑ NO

BUMP STEER ON ACKERMAN: ☑ UP ☐ DOWN SHIM 2 mm

BUMP STEER ON KNUCKLE: ☑ UP ☐ DOWN SHIM 0 mm

FRONT ARM POSITION: ☐ FRONT ☑ MIDDLE ☐ REAR

KPI OPTION: ☐ KPI 0 (ROUND MARK) ☑ KPI 1 (LONG MARK)

C BLOCK CASTER: ☑ CASTER 1 (1 MARK) ☐ CASTER 2 (2 MARKS)

ARM INSERT ☐ NO ☑ PLASTIC ☐ CARBON

KICK UP: 1 ☐ 0,5 ☐ 0 ☐ 0,5 ☐ 1 ☑ / 1 ☑ 0,5 ☐ 0 ☐ 0,5 ☐ 1 ☐

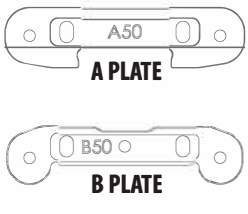

		A PLATE	B PLATE	TOWER
☑ +2mm SHIM (NO upper gearbox shim)	+2 ☑		☐	☑
☐ +1mm SHIM (1mm upper gearbox shim)	+1 ☐		☐	☐
☐ NO SHIM (2mm upper gearbox shim)	0 ☐		☑	☐

REAR END

ARM INSERT ☐ NO ☑ PLASTIC ☐ CARBON

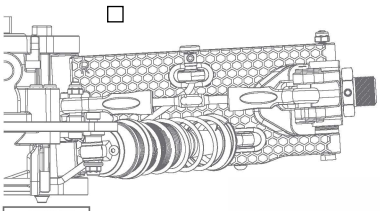

SHOCK TOWER ☑ ALUMINIUM ☐ CARBON

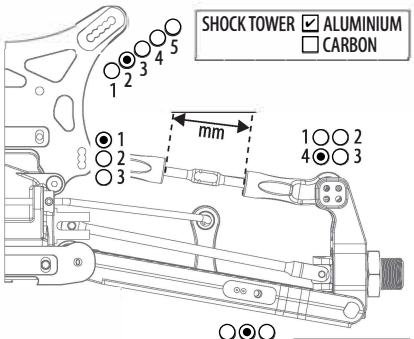

OPTIONAL REAR HUB

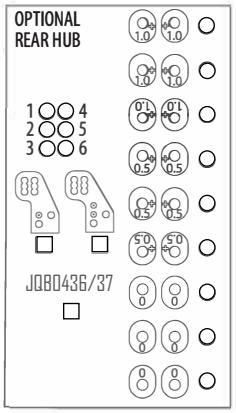

HEX WIDTH: ☐ 4 mm ☐ 5 mm ☑ 6 mm

SPACER IN FRONT OF HUB 3 mm

REAR AXLE CVD ☐ UNIVERSAL ☐ 91 ☑ 94

REAR HUB: ☐ PLASTIC ☑ ALUMINIUM

ANTI-SQUAT: 1 ☑ 0,5 ☐ 0 ☐ 0,5 ☐ 1 ☐ / 1 ☐ 0,5 ☐ 0 ☐ 0,5 ☐ 1 ☑

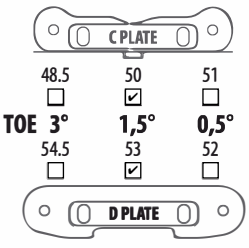

	48.5	50	51
TOE	3°	1,5°	0,5°
	54.5	53	52

		C PLATE	D PLATE	TOWER
☐ +2mm SHIM	+2 ☐		☐	☐
☑ +1mm SHIM	+1 ☑		☑	☑
☐ NO SHIM	0 ☐		☐	☐

RADIO SETTINGS

	THROTTLE	STEERING
DUAL RATE		
SPEED		
EXPO		
SERVOMODEL		
	THROTTLE	BRAKE
ELECTRIC EPA		

BODY & WING

BODYSHELL: Mayako V2
WING BRAND: Mayako
WING MODEL: Wing of David
WING POSITION: ☐ 1 ☐ 2 ☑ 3 ☐ 4
1 IS FRONT HOLE (WING BACK)
WING FLAPS: ☐ BIG ☐ SMALL ☐ BOTH
GURNEY: ☑ NO ☐ SMALL ☐ BIG

NOTES