RC10 B74 TEAM KIT

Driver: _____ Event: _____
Date: _____ Track: _____
Qualify: _____ TQ: ☐ Main: _____ Finish: _____ Best Lap Time: _____

Front Suspension

Ride Height: 22mm
Camber: -2.5
Toe: 1 out
Anti-Roll Bar: 1.3mm
Arm Type:
Wheelbase Shim:
Wheel Hex:
Caster Block: 8° ☐ 9° ☑ 10° ☐
Chassis Brace: Plastic ☐ Carbon ☑
Top Plate Brace: Yes ☑ No ☐
Front Axles: CVA ☑ DCV ☐

Notes

Front Chassis Brace Screws

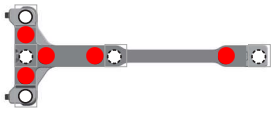

Arm Mount A

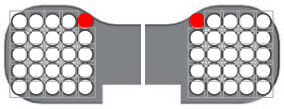

Arm Mount B

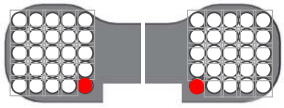

Ball Stud Spacing:

Diff Height

Axle Height: +3 ☐ +2 ☐ +1 ☑ 0 ☐

Ball Stud Spacing: .5mm

Steering Plate:

Ball Stud Spacing: 2mm

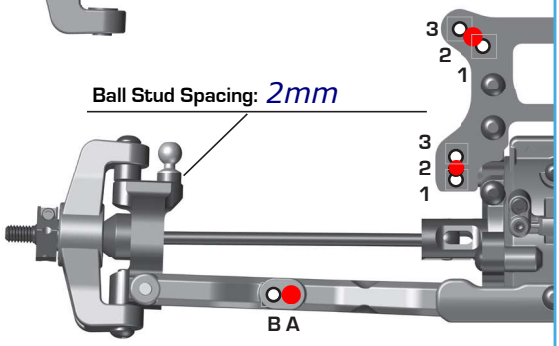

Rear Suspension

Ride Height: 21mm
Camber: -1.5
Anti-Roll Bar: 1.2mm
Arm Type:
Wheelbase Shim:
Wheel Hex:
CVA Bone Length:
Chassis Brace: Plastic ☐ Carbon ☑
Hub Spacing: Fwd ☐ Mid ☑ Back ☐

Brass chassis brace (30g)

Notes

Rear Chassis Brace Screws:

Arm Mount C

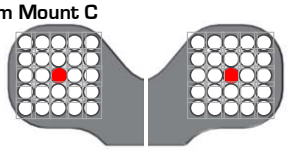

Arm Mount D

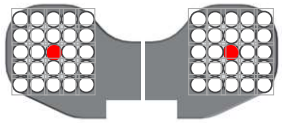

Diff. Height

Axle Height:
+3 (⇩0/3⇧)
+2 (⇩0/2⇧)
+1(⇧0/2⇩)
+0 (⇧0/3⇩)

Camber Link Spacing: 2mm

Ball Stud Spacing: 2mm

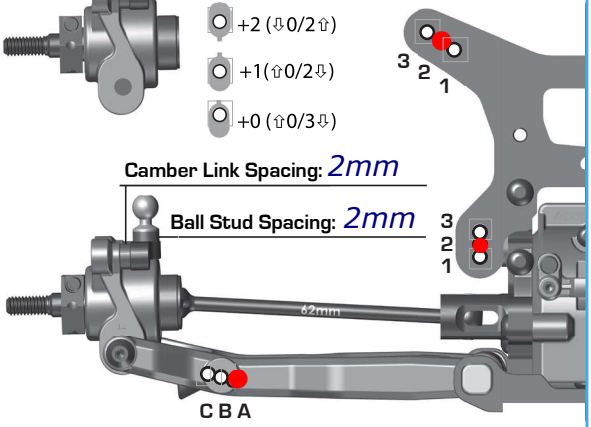

Electronics, Drivetrain

Radio: Servo:
EPA: Throttle: % Brake: %
ESC:
ESC Settings:
Motor: Timing:
Pinion: Spur:
Battery:
Battery Position:

Front Fluid: 7K / 42.5 grs
Gears: Plastic ☐ Metal ☑
Center Fluid: 200K / 31.9 grs
Gears: Plastic ☐ Metal ☑
Rear Fluid: 5K / 42.33 grs
Gears: Plastic ☐ Metal ☑
Slipper Clutch:
# of Pads

Shocks	Front	Rear
Piston:	1.6	1.7
Fluid:	37.5	32.5
Spring:	Yellow	White
Limiters:	1mm	1mm
Stroke:		
Eyelet Length:	Short	Short
Cup Offset:	5mm	9mm
Notes:	VPR pistons	

www.PetitRC.com

Track Info, Tires & Aero

Size: Small ☑ Medium ☐ Large ☐ Extra Large ☐
Surface: Dirt ☑ Carpet ☐ Astroturf ☐ Multi Surface ☐
Traction: Low ☐ Medium ☑ High ☐ Very High ☐
Moisture: Dry ☑ Damp ☐ Wet ☐
Condition: Indoor ☑ Outdoor ☐ Dusty ☐ Hard Packed ☐
Bumpy ☐ Grooved ☐ Smooth ☐ Loamy ☐
Temperature: Ambient: Humidity:
Notes:

Front Tires:
Front Compound:
Front Insert:
Rear Tires:
Rear Compound:
Rear Insert:
Wheel (F/R):
Notes:

Body:
Wing: Proline
Wing Angle: 0° ☐ 6° ☑
Front Wing Yes ☐ No ☑
Weights:
Total Vehicle Weight:

Comments