SO 1.0 SETTING SHEET Ver.01

DRIVER: Logan Toia

DATE: 6/08/2023

CIRCUIT: HRCCC Waikatos Start

●INDOOR ○OUTDOOR
○DIRT ○ASTROTURF ●CARPET ○GLASS ○WOOD
○WET ●DRY ○DUSTY ●SMOOTH ○BUMPY
○HARD PACKED ○CLAY ○BLUE GROOVE ○ _____
○LOW TRACTION ●MED TRACTION ●HIGH TRACTION

FRONT

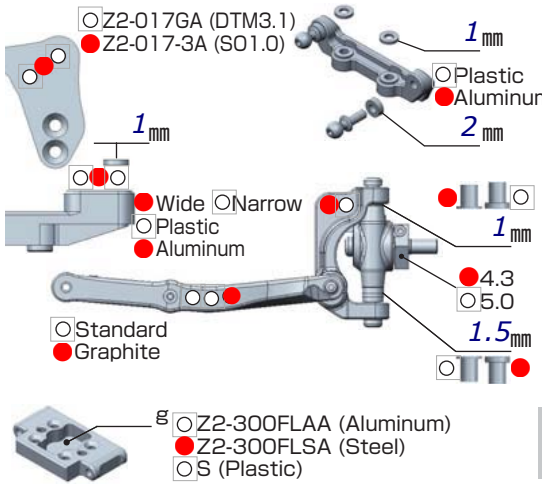

◆CAMBER ●↔○ 2°

◆TOE ○IN ●OUT 0°

◆RIDE HEIGHT 14 mm

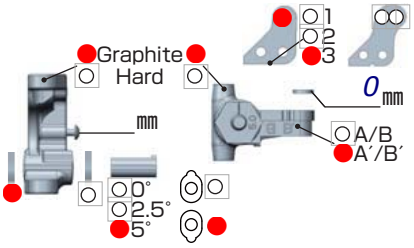

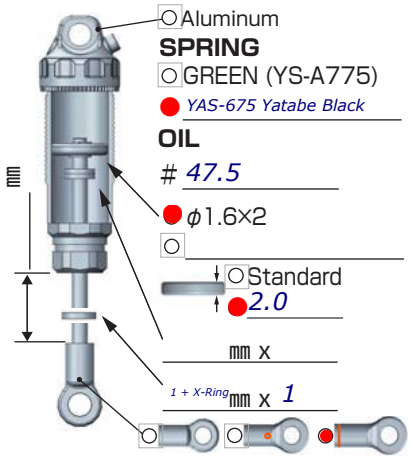

REAR

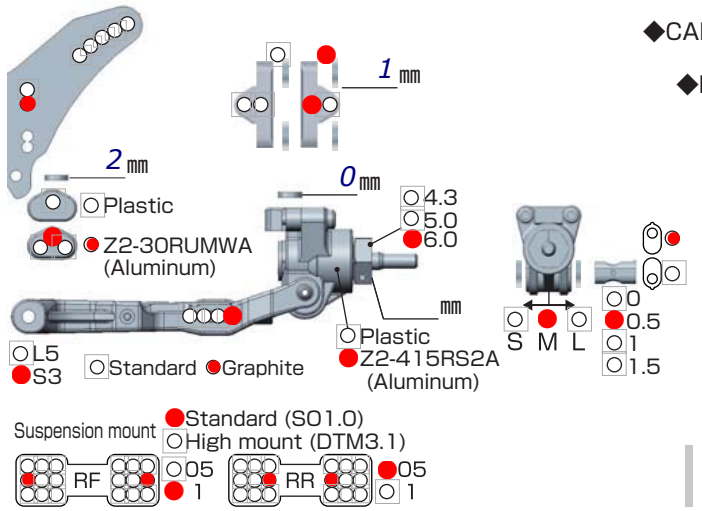

◆CAMBER ●↔○ 2°

◆RIDE HEIGHT 14 mm

1.3 mm

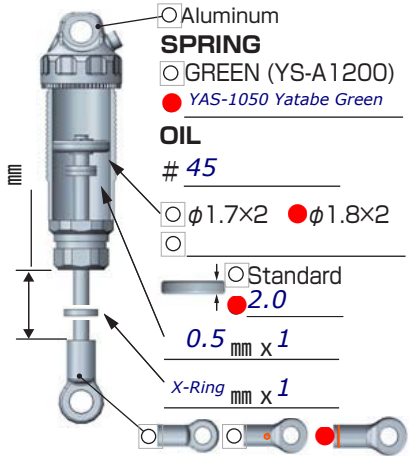

DRIVE

MOTOR	HW v10 G3 6.5t	Rotor	std mm
GEAR	Spur 80T / Pinion	21	T:2.6
BATTERY	Gens Ace 5100mah Redline		
ESC	HW XR10 Pro G2S		
SETTING			

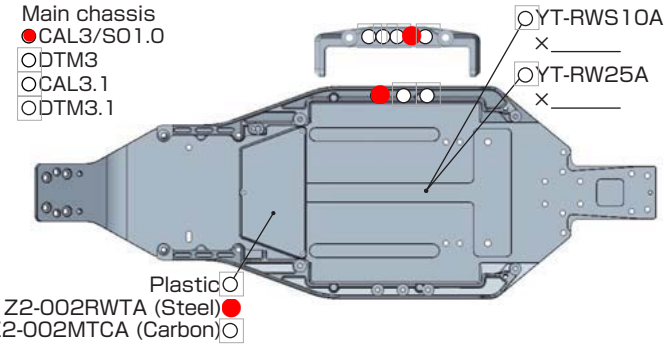

TIRE

FRONT		REAR	
TIRE	Jconcepts Fuzz Bite	TIRE	Jconcepts Siren
INSERTS	None	INSERTS	JC Gray
WHEELS	Yokomo	WHEELS	Yokomo

OTHER

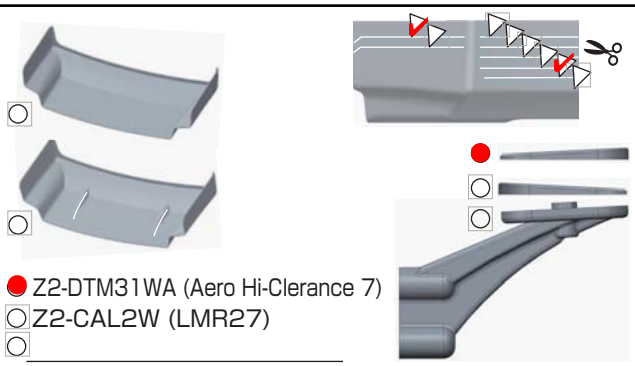

●Z2-DTM31WA (Aero Hi-Clerance 7)
○Z2-CAL2W (LMR27)
○ _____

Sanwa PGS-XBII Full size servo, Z2-002SG, 3 pad slipper, F2 Body

COMMENT

ArnO PettiRc.com