YZ-2T SETTING SHEET Ver.01

DRIVER	Logan Toia
DATE	23/04/23

CIRCUIT HRCCC indoor

●INDOOR ○OUTDOOR
○DIRT ●ASTROTURF ●CARPET ○GLASS ○WOOD
○WET ○DRY ○DUSTY ●SMOOTH ○BUMPY
○HARD PACKED ○CLAY ○BLUE GROOVE ○
○LOW TRACTION ○MED TRACTION ●HIGH TRACTION

FRONT

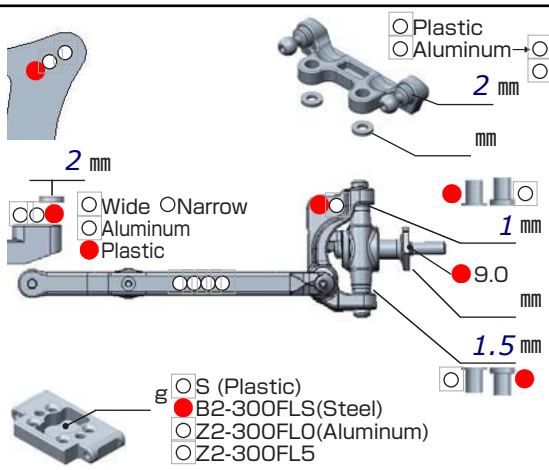

◆CAMBER ●←→○ 2 °

◆TOE ○IN ●OUT 1 °

◆RIDE HEIGHT 18 mm

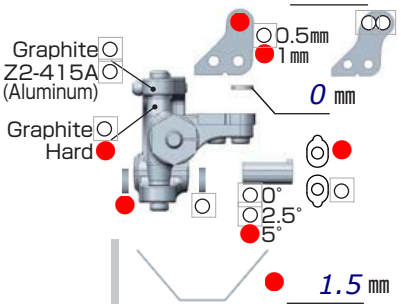

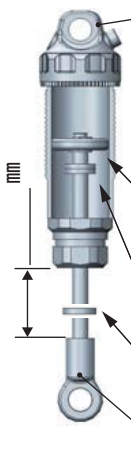

○Aluminum

SPRING

●Standard (YS-FRST)

○

OIL

47.5

●φ1.6×2 (BM-S162)

○

●

○

○

mm x

mm x

●

○

REAR

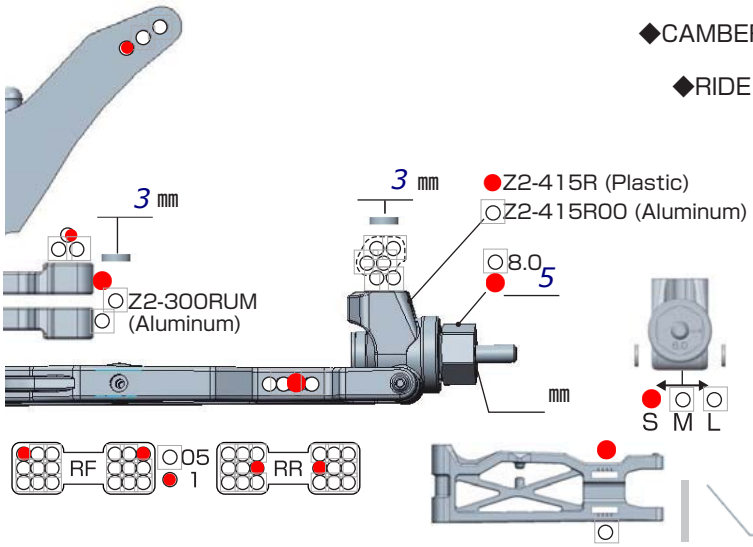

◆CAMBER ●←→○ 2 °

◆RIDE HEIGHT 18 mm

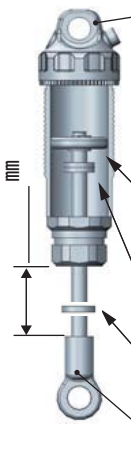

○Aluminum

SPRING

●Standard (YS-FRST)

○

OIL

42.5

●φ1.7×2 (BM-S172)

○

●

○

○

mm x

mm x

●

○

DRIVE

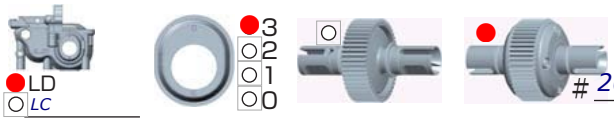

MOTOR	➪ Zombie 10.5t	Rotor std mm
GEAR	➪ Spur 80 T ／ Pinion 17 T : 2.6	
BATTERY	➪ Zombie 4400mah LCG	
ESC	○ YOKOMO BL-PRO4	
	● HW XR10 Pro G2	

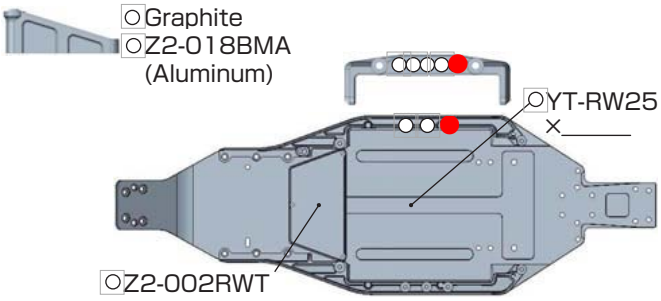

COMMENT

TIRE

FRONT		REAR	
TIRE	➪ PRO-LINE PRISM T 2.2" Z3 (Medium)	TIRE	➪ Proline Prisim CR3
INSERTS	➪ PL Open Cell	INSERTS	➪ PL Open Cell
WHEELS	➪ JC	WHEELS	➪ JC

OTHER

○F2 Body (Standard)
●JC Finnisher

SF2 rear hubs - 0.5 up, 3 hole outer ballstud mount - Middle Forward, Cal3 Steering rack, Alu Bellcranks, Upside down rear shocks

COMMENT

AmO PettiRC.com