マヤコ | Mayako
unofficial MX8E v0.3

SETUP SHEET
v. 1.2 - UPPER LINKS

DRIVER Bas Ruijter
TRACK RACO2000 Utrecht (WET)
RACE BuggyCup 1 **DATE** 23-04
TEMP 15c **BEST LAP** 43.192 **BEST RESULT** 1 **QUALIFYING POS.** 2 **FINAL POS.** 1

TRACK SIZE ■ TIGHT ■ MEDIUM ☐ OPEN
SURFACE ☐ DUSTY ☐ BLUE GROOVE ■ LOW GRIP ■ MEDIUM GRIP ☐ HIGH GRIP
CONDITION ■ SMOOTH ■ BUMPY ☐ 50/50 ☐ CLAY ☐ GROOVE WITH DUST ■ EDGY

ESC	Xerun XR8 Pro	BATT MAH	7500	FRONT DIFF OIL	10k	OIL QUANTITY(gr)	49.7	DIFF GEAR	45
MOTOR	HobbyWing	BATT TYPE	☑ 4S ☐ 2X2S	CENTER DIFF OIL	7k	OIL QUANTITY(gr)	59.5	DIFF PINION	14
MOTOR KV	1900	BATT SIZE	☑ STICK ☐ SHORTY	REAR DIFF OIL	3k	OIL QUANTITY(gr)	49.7	SPUR GEAR	48
BATTERY	Ultimate	BATT VOLTAGE	☐ 14.8v ☑ 15.2v LIHV	RUNTIME	N/A			MOTOR PINION	15

SHOCKS

	FRONT	REAR
OIL	500	350
PISTON	5x1.5	5x1.5
SPRING	Black	Brown
LENGTH		
VISIBLE SHAFT LENGTH		
REBOUND	0	0

FRONT SHOCK END ☑ LONG ☐ SHORT
SHOCKS TYPE ☑ EMULSION ☐ BLADDER

NOTES
Stock 20c oils:
5x1.5/5x1.5 - 600/450
6x1.3/6x1.4 - 500/450
7x1.3/7x1.4 - 550/550
8x1.2/8x1.3 - 550/500
For each 5c drop, -50 cst

CHASSIS

	FRONT	REAR
CAMBER	-1	-2
RIDE HEIGHT	24	26
DOWNTRAVEL (WITH TYRES)		
DOWNTRAVEL (on 36mm blocks)	0 (30)	-3 (27)
ANTI ROLL BARS	2.2	2.4

CENTRE DIFF MOUNT TOP ☐ CARBON (KIT) ☑ ALU (OPT)

BATT POSITION FWD/AFT
☐ ● ● ☐ ☐ ☐ ☐ ☐ ☐ ● ●

WEIGHT

TYRES

	FRONT	REAR
BRAND	Schumacher	Schumacher
TREAD	Minipin	Minipin
COMPOUND	Yellow	Yellow
WHEELS	ProCircuit	ProCircuit
INSERTS	Black	Black
GLUED TO WHEEL	☐ YES ☐ NO	☐ YES ☐ NO

FRONT END

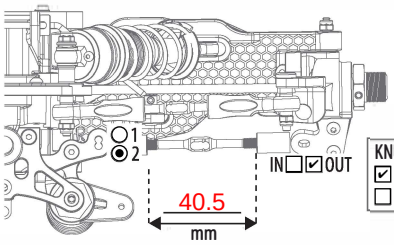

HEX WIDTH ☐ 4 mm ☑ 5 mm ☐ 6 mm

KNUCKLE PLATE ☑ 1 LONG ☐ 2 SHORT

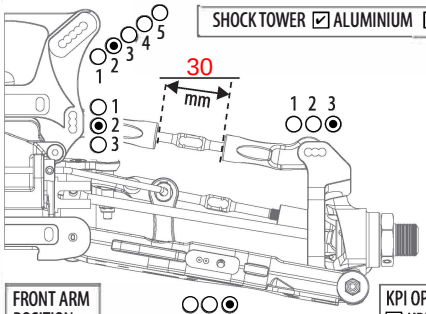

SHOCK TOWER ☑ ALUMINIUM ☐ CARBON

KNUCKLE POSITION ☑ UP ☐ MIDDLE ☐ DOWN

FRONT ARM POSITION ☐ FRONT ☑ MIDDLE ☐ REAR

KPI OPTION ☐ KPI 0 (ROUND MARK) ☑ KPI 1 (LONG MARK)

C BLOCK CASTER ☐ CASTER 1 (1 MARK) ☑ CASTER 2 (2 MARKS)

ARM INSERT ☐ NO ☑ PLASTIC ☐ CARBON

SERVO SAVER ☐ YES ☑ NO

BUMP STEER ON ACKERMAN ☑ UP ☐ DOWN SHIM 2 mm

BUMP STEER ON KNUCKLE ☑ UP ☐ DOWN SHIM 1 mm

KICK UP: 1 ☐ 0,5 ☐ 0 ☐ 0,5 ☐ 1 ☑

A PLATE

1 ☐ 0,5 ☐ 0 ☑ 0,5 ☐ 1 ☐

B PLATE

	A PLATE	B PLATE	TOWER
☐ +2mm SHIM (NO upper gearbox shim)	+2 ☐	☐	☐
☐ +1mm SHIM (1mm upper gearbox shim)	+1 ☐	☐	☐
☑ NO SHIM (2mm upper gearbox shim)	0 ☑	☑	☑

REAR END

ARM INSERT ☐ NO ☑ PLASTIC ☐ CARBON

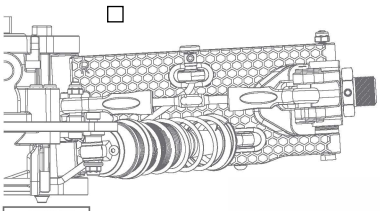

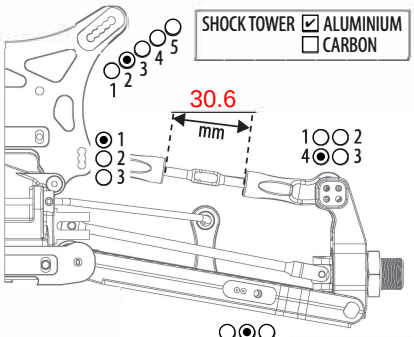

SHOCK TOWER ☑ ALUMINIUM ☐ CARBON

OPTIONAL REAR HUB

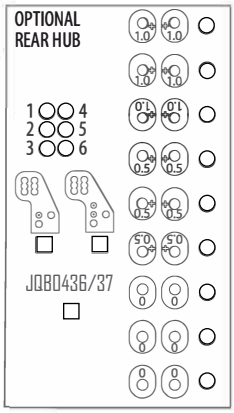

HEX WIDTH ☐ 4 mm ☐ 5 mm ☑ 6 mm

SPACER IN FRONT OF HUB 2 mm

REAR AXLE CVD ☐ UNIVERSAL ☐ 91 ☑ 94

REAR HUB ☐ PLASTIC ☑ ALUMINIUM

ANTI-SQUAT: 1 ☐ 0,5 ☐ 0 ☑ 0,5 ☐ 1 ☐

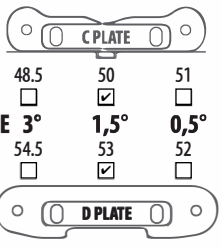

	48.5	50	51
	☐	☑	☐
TOE	3°	1,5°	0,5°
	54.5	53	52
	☐	☑	☐

	C PLATE	D PLATE	TOWER
☑ +2mm SHIM	+2 ☑	☑	☑
☐ +1mm SHIM	+1 ☐	☐	☐
☐ NO SHIM	0 ☐	☐	☐

RADIO SETTINGS

	THROTTLE	STEERING
DUAL RATE		
SPEED		
EXPO		
SERVOMODEL		
	THROTTLE	BRAKE
ELECTRIC EPA		

BODY & WING

BODYSHELL Mayako V2
WING BRAND Mayako
WING MODEL Wing of David
WING POSITION ☐ 1 ☐ 2 ☑ 3 ☐ 4
1 IS FRONT HOLE (WING BACK)
WING FLAPS ☐ BIG ☐ SMALL ☐ BOTH
GURNEY ☑ NO ☐ SMALL ☐ BIG

NOTES

MPC 3-piece rear hub. 0 insert, 3mm height shims, 0mm length shims, inner top hole to correspond with hole 1 on the plastic hub.

+1 = 31
0 = 30
-1 =29