Reset

Name Aaron Dexter

Date

Track MORBC

Weather & Temp

Driver Mood

Tight	✔ Low Grip
✔ Medium	✔ Medium Grip
✔ Open	High Grip
✔ Smooth	Dusty
Rough	BlueGroove

JQ RACING BLACKEDITION

FRONT

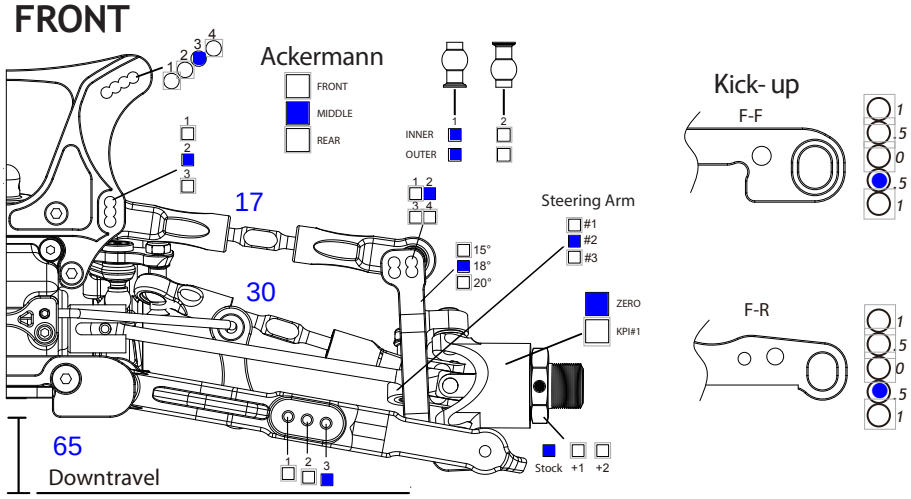

REAR

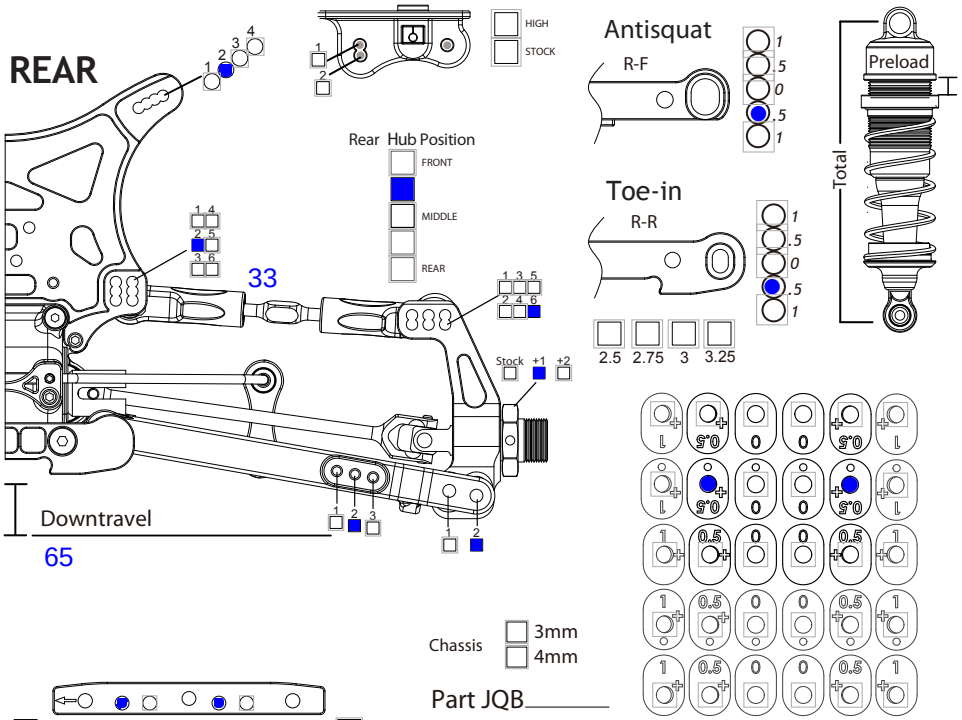

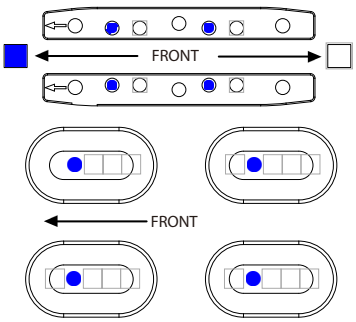

	FRONT	REAR
*		
Ride Height	26	27
Downtravel With Tyres	65	65
Swaybar	2.3	2.5
Brake Balance	60 %	40 %
Camber	Length: 17 mm	Length: 33 mm
	Degree:	Degree:
Steering Link / Front Toe	Length: 30 mm	
	Degree:	

SHOCKS

Oil wt / Brand	600 ULT	600 ULT
Piston	7X1.25	7X1.35
Spring	Mugen 9.0	Mugen 10.5
Length	Preload: mm	Preload: mm
	Total: mm	Total: mm
Rebound	0	0
Type	Emulsion ■	Bladder □

TYRES

Tread / Brand	Triple Dees	
Compound	Blue	
Insert		
Wheel	Bullet	

DIFFS

	FRONT	CENTER	REAR
Oil wt / Brand	15000	12500	7000
Gear ratio (main/pinion)	45/14	49/13	45/14

Car Weight g

Engine M3x	Plug P3	Fuel NitroX 30
Pipe 2141	Clutch 3 x Alu	Clutch Spring 1x1.0, 2x1.1

Best Lapt ime
Runtime
Best result
Qualifying Position
Final Position

NOTES

Front arm moved 2 mm back
YE Shock Shafts in front for more droop #JQB0058. Aluminium Servo Saver #JQB0175.
Easy Adjustable Break linkage #JQB0309B. D Plate Low Square Insert (1.5deg) #JQB0308
Carbon Fibre Rear Tower #JQB0442A
Centre Universal Driveshafts #JQB0178 and #JQB0404
2020 rear hub, Lunsford Turnbuckles, HB Wing Mount +10mm. JC F2I, wing moved forward.
JC Front Wing