マヤコ | Mayako
unofficial MX8E v0.3

SETUP SHEET
v. 1.2 - UPPER LINKS

DRIVER Bas Ruijter
TRACK MVW Purmerend
RACE Wintercup Race 2 **DATE** 21-01
TEMP 0-5c **BEST LAP** 34.806 **BEST RESULT** 2nd **QUALIFYING POS.** 6th **FINAL POS.** 5th

TRACK SIZE ■ TIGHT ■ MEDIUM ☐ OPEN
SURFACE ■ DUSTY ☐ BLUE GROOVE ■ LOW GRIP ■ MEDIUM GRIP ☐ HIGH GRIP
CONDITION ■ SMOOTH ■ BUMPY ☐ 50/50 ☐ CLAY ☐ GROOVE WITH DUST ■ EDGY

ESC	REDS Z8 PRO	BATT MAH	7500	FRONT DIFF OIL	30k	OIL QUANTITY(gr)	49.7	DIFF GEAR	45
MOTOR	REDS V8 G4	BATT TYPE	☑ 4S ☐ 2X2S	CENTER DIFF OIL	15k	OIL QUANTITY(gr)	59.5	DIFF PINION	14
MOTOR KV	1900	BATT SIZE	☑ STICK ☐ SHORTY	REAR DIFF OIL	7k	OIL QUANTITY(gr)	49.7	SPUR GEAR	48
BATTERY	Ultimate	BATT VOLTAGE	☐ 14.8v ☑ 15.2v LIHV	RUNTIME	N/A			MOTOR PINION	15 Arrowm

SHOCKS

	FRONT	REAR
OIL	400	300
PISTON	5x1.5	5x1.5
SPRING	Black	Brown
LENGTH		
VISIBLE SHAFT LENGTH		
REBOUND	0	0

FRONT SHOCK END ☑ LONG ☐ SHORT
SHOCKS TYPE ☑ EMULSION ☐ BLADDER

NOTES
Stock 20c oils:
5x1.5/5x1.5 - 600/500

FRONT END

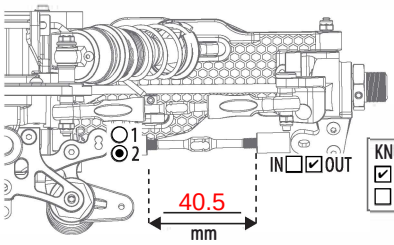

HEX WIDTH
☐ 4 mm
☑ 5 mm
☐ 6 mm

KNUCKLE PLATE
☑ 1 LONG
☐ 2 SHORT

SHOCK TOWER ☑ ALUMINIUM ☐ CARBON

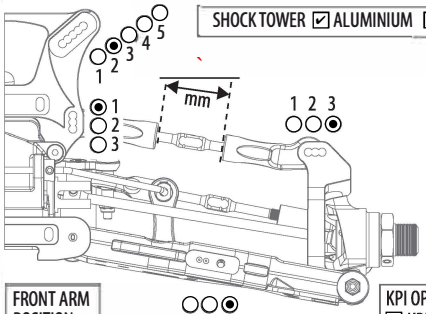

KNUCKLE POSITION
☐ UP
☐ MIDDLE
☑ DOWN

FRONT ARM POSITION
☐ FRONT
☑ MIDDLE
☐ REAR

KPI OPTION
☐ KPI 0 (ROUND MARK)
☑ KPI 1 (LONG MARK)

C BLOCK CASTER
☑ CASTER 1 (1 MARK)
☐ CASTER 2 (2 MARKS)

SERVO SAVER
☐ YES
☑ NO

BUMP STEER ON ACKERMAN
☑ UP
☐ DOWN
SHIM 0 mm

BUMP STEER ON KNUCKLE
☑ UP
☐ DOWN
SHIM 0 mm

ARM INSERT ☐ NO ☑ PLASTIC ☐ CARBON

KICK UP: 1 ☐ 0,5 ☐ 0 ☐ 0,5 ☐ 1 ☑ / 1 ☑ 0,5 ☐ 0 ☐ 0,5 ☐ 1 ☐

A PLATE

B PLATE

		A PLATE	B PLATE	TOWER
☑ +2mm SHIM (NO upper gearbox shim)	+2 ☑		☐	☑
☐ +1mm SHIM (1mm upper gearbox shim)	+1 ☐		☐	☐
☐ NO SHIM (2mm upper gearbox shim)	0 ☐		☑	☐

CHASSIS

	FRONT	REAR
CAMBER	-1	-2
RIDE HEIGHT	24	25
DOWNTRAVEL (WITH TYRES)		
DOWNTRAVEL (on 36mm blocks)	0 (30)	-1 (29)
ANTI ROLL BARS	2.3	2.4

CENTRE DIFF MOUNT TOP ☑ CARBON (KIT) ☐ ALU (OPT)

BATT POSITION FWD/AFT
☐ ● ● ☐ ☐ ☐ ☐ ☐ ☐ ● ●

WEIGHT

REAR END

ARM INSERT ☐ NO ☑ PLASTIC ☐ CARBON

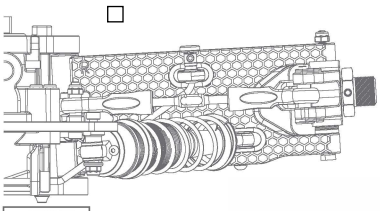

SHOCK TOWER ☑ ALUMINIUM ☐ CARBON

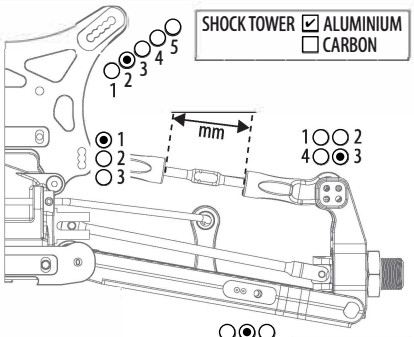

OPTIONAL REAR HUB

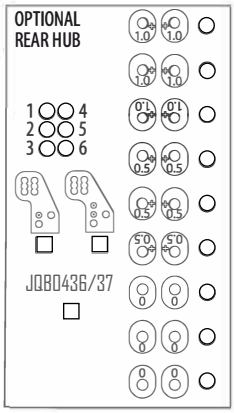

HEX WIDTH
☐ 4 mm
☐ 5 mm
☑ 6 mm

SPACER IN FRONT OF HUB 3 mm

REAR AXLE CVD ☐ UNIVERSAL ☐ 91 ☑ 94

REAR HUB
☐ PLASTIC
☑ ALUMINIUM

ANTI-SQUAT: 1 ☑ 0,5 ☐ 0 ☐ 0,5 ☐ 1 ☐ / 1 ☐ 0,5 ☐ 0 ☐ 0,5 ☐ 1 ☑

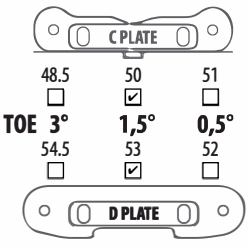

	48.5	50	51
TOE	3°	1,5°	0,5°
	54.5	53	52

		C PLATE	D PLATE	TOWER
☐ +2mm SHIM	+2 ☐		☐	☐
☑ +1mm SHIM	+1 ☑		☑	☑
☐ NO SHIM	0 ☐		☐	☐

TYRES

	FRONT	REAR
BRAND	Schumacher	Schumacher
TREAD	Minipin	Minipin
COMPOUND		
WHEELS	ProCircuit	ProCircuit
INSERTS	Black	Black
GLUED TO WHEEL	☐ YES ☐ NO	☐ YES ☐ NO

RADIO SETTINGS

	THROTTLE	STEERING
DUAL RATE		
SPEED		
EXPO		
SERVOMODEL		
	THROTTLE	BRAKE
ELECTRIC EPA		

BODY & WING

BODYSHELL Mayako V2
WING BRAND Mayako
WING MODEL Wing of David
WING POSITION ☐ 1 ☐ 2 ☑ 3 ☐ 4
1 IS FRONT HOLE (WING BACK)
WING FLAPS ☐ BIG ☐ SMALL ☐ BOTH
GURNEY ☑ NO ☐ SMALL ☐ BIG

NOTES

3 piece rear hub: 0 shims lenght and height. Middle outside hole.